Certified UNI EN ISO 9001:15
N° 17381-A
Certified F-Gas
N° 767-Esa

INSTALLATION, USE AND MAINTENANCE MANUAL

☐

Installation Manual
Indoor Unit for Heat Pump System

English

☐ IZY	☐ UB	☐ UBK	☐ Custom
☐ UC	☐ UCP	☐ UC Modul	☐ AIRJET……

Model	***Serial number***	***Date of production***

Index

CAREFULLY READ THE INSTRUCTIONS CONTAINED IN THE MANUAL BEFORE INSTALLING THE APPLIANCE. THE INDICATIONS PROVIDED WILL ALLOW YOU TO INSTALL AND CONFIGURE THE UNIT CORRECTLY. ONCE READ, THIS MANUAL MUST BE KEPT IN A WELLSTOCKED PLACE SO THAT IT IS AVAILABLE FOR FUTURE REFERENCE

COMPANY NAME	**THERMOWELL® DI RENATO NAPOLI**
REGISTERED OFFICE	73010 SURBO (LE) – *Via Ugo Foscolo, 8*
REA NUMBER	LE - 206046
VAT	03170220754
F.C.	NPLRNT60C16B180L
TELEPHONE	0832-300214
WEBSITE	*www.thermowellmarine.com*
MAIL ADDRESS	*info@thermowellmarine.com*
PEC ADDRESS	*thermowell@pec.it*
	@ThermowellMarine
	@ThermowellMarin
	@Thermowell I Marine air conditioning

1. Introduction

This user's manual refers to air and water condensed chillers. These appliances are designed to be installed in in enclosed spaces - from the smallest to the biggest boats - and to be used in both cooling and/or heating marine applications. They can be used in any air-conditioning application combined with fan coils and air treatments units - as for the UC and UCP line products - (see § ***5.1***) or they can be used as single direct expansion self contained systems as for the UB-BB-UBK and AIRJET line products, the innovative air conditioner directly powered in 12/24V (see § ***5.1***).

Moreover, they're suitable for cooling water too, that is necessary for any other industrial process. This manual was made to assure a proper management and maintenance of the appliance. In this manual you'll find the terms of use and all the instructions you may need in case of problems. The appliance is equipped with a series of safety devices (*see Chapter 7*) that, however, can't prevent any problems arising from an unproper use or inappropriate maintenance of it. In case of persistent problems, we advise you to contact the company that installed the appliance.

2. Warnings and precautions for use

The precautions given in this manual must be followed carefully.

All the activities here described must be performed by an installer in accordance with the existing legislation.
Remember that it's necessary to wear a proper protective equipment (*protective gloves, safety glasses…*) during the installation, maintenance or support activity performed on the unit.

In case of any doubts about the installation or operation of the unit, please contact your local dealer to ask for support and information.

Unproper installation or assembly of the appliance or of one of its accessories may cause electrocution, short-circuit, losses or damages to the pipes or other parts of the appliance.

DANGER OF ELECTROCUTION

- Before removing the switchboard cover, making a connection or touching eletrical components, please ***disconnect the power.***

NEVER touch any switches with wet fingers: *you might run into electriocutions*. Before touching the electrical components ***turn off*** all power sources.
To avoid the danger of electricocutions, make sure you ***turned off*** the power at least 1 minute before operating on the electrical parts. Even after 1 minute, always measure the voltage on the terminals of the capacitors of the main circuit or of the electrical parts and, before touching, make sure that the measured voltage is 50 V CC or lower.
Once the covers have been removed, it may happen to accidentally touch the live components. During the installation or maintenance, **NEVER** leave the unit unattended with its cover opened.

DANGER: DON'T TOUCH THE PIPES AND THE INTERNAL COMPONENTS

- **DON'T** touch the refrigerant pipes, the hydraulic pipes or the internal components during and immedialy afterwards the functioning. The pipe and the internal parts could be very hot or cold, depending on the operating condition of the unit.

Touching the pipes or the internal components may lead to burns caused by excessive hot or cold temperature. To prevent the risk of injuries, let the temperature level of the pipes and the internal components reduce to an acceptable level or, if intervention is needed, wear a protective glove.

WARNING

- **DON'T** touch directly the refrigerant accidentally leaked because it could cause severe burns due to the excessive low temperature.

- **DON'T** touch the refrigerant pipes during and after the operation because they could have either very high or low temperature, depending on the conditions of the refrigerant running through the pipes, the compressor and the other parts of the refrigeration cycle. If you touch the pipes of the refrigerant, your hands could be burnt or suffer from burns due to the frost. To prevent injuries, please wait until the temperature of the pipes reaches the room temperature. If you really have to touch them, make sure that you wear a pair of suitable gloves.

WARNING

- **DON'T** clean the unit with water: it may cause electricutions or wildfires.

3. Main components of the refrigeration circuit

The physical state of the refrigerant undergoes changes as it flows into the appliance. These changes are caused by the following main components that are part of the refrigeration circuit.

- **Compressor**

The compressor works as a pump and allows the circulation of the refrigerant.
It compresses the steam of the refrigerant coming from the evaporating exchanger by increasing the pressure to such a level that it allows the liquefaction they're subject to in the condensing exchanger.

- **Condensing/Evaporating exchanger**

The function of the exchanger is to change the state of the refrigerant from a gaseous to a liquid one.
The heat absorbed by the gas in the evaporating exchanger is disposed of through the condensing exchanger and the steam condenses getting liquid.

- **Filter**

The filter installed at the bottom of the exchanger aims to both retain the impurities that might clog the pipes and to dispose of the gas moisture.

- **Expansion valve**

The liquid refrigerant coming from the condensing exchanger enters the evaporating part after passing through an expansion valve.
This valve takes the pressure of the liquid refrigerant to such a level that allows it to evaporate in the evaporating exchanger by absorbing the heat coming from the fluid of the cooling process.

- **Evaporating exchanger**

The aim of the evaporating exchanger is to absorbe heat from the fluid going through it, thus cooling it down.
The evaporation of the fluid coming from the condensing exchanger makes it possible.

- **Water inlet/outlet connections**

The water inlet/outlet connections allow the appliance to be easily connected to the water circuit of the system that leads it to the users' points.

*For further details about the components used see § **5.3 Connecting the units to***

4. Symbols used

The warnings found in this manual are classified according to their seriousness and probability of occurrence.

DANGER
It refers to a situation of imminent danger that could lead to death or serious injuries if it is not prevented.

WARNING
It refers to a potentially dangerous situation that could lead to death or serious injuries if it is not prevented.

CAUTION
It refers to a potentially dangerous situation that could lead to minor or moderate injuries. It may be used to indicate dangerous practices too.

NOTICE
It refers to situations that could lead to damages to appliances or objects only.

INFORMATION
This symbol means useful suggestions or additional information.

There are special symbols to mean other types of danger.

5. Installation – General rules

5.1 Handling

Once you removed the UC-UCP chillers from their original packaging, they must be moved to their final position by using only the specific handles (if any) or by securely grabbing the steel structure *(preferably from the four corners at the bottom)* with regard to UB-UBK-BB-IZY and AIRJET air conditioners.
Anyway, never handle the unit by grabbing the components of the refrigeration or hydraulic circuit (*e.g. pipes*) in order to prevent damages to the appliance.

5.2 Positioning of the units

The UC and UCP chillers can be installed either in the engine room, in a service space, or in the cabins. The temperature normally reached in the engine room is high to such an extent that it could compromise the proper functioning of the unit.
What matters is that the units must not be installed in places where they could be in contact with direct splashes of seawater or discharges of bilge water.
The primary requirement to follow is to choose a place where all the machine components can be easily accessible so as to allow the maintenance and/or any repairs to be done. In particular, the components that more than other must be easily accessible are the compressors and the electrical panel. In some models, you can remote the electrical panel, that is normally fixed on the machine.
The chiller unit must be securely anchored to a fixed horizontal support by means of the specific stainless steel clamps that are provided *(provide for a clamp for each of the sides of the base or 2 clamps on each of the long sides)* in order to avoid movements during the most burdensome conditions. The clamps must be inserted on the edge of the condensate drain pan and fixed to the horizontal plane by means of self-tapping screws or through-bolts. It is recommended to install the unit on

anti-vibration supports – to limit the transmission of the vibrations caused by the machine operation – to the structure of the hull.
Pay attention to choose the supports that have the adequate capacity to hold the weight of the machine.
To make the installation easier, it is advisable to definitively fix the clamps only when the installation of the chilled water, seawater and condensate drain circuits are done.
Although the air conditioner is extremely silent, you should always consider the noise emissions when positioning it.
So, it is better to install it in the engine room rather than in a living room or in a cabin.

The UB-UBK-IZY-AIRJET self-contained air conditioners must be installed in the room that will be conditioned; this area must allow the proper air circulation *(free-breathing air intake section)* and it must be easily accessible to do the maintenance operations.

With regard to BB air conditioners, you can decide to install the condensing unit either in the room that will be conditioned and in the engine room, while the ventilating unit must necessarily be installed in the room that will be conditioned.

With regard to BB units, the condensing unit must be installed at the same level, or at a lower level, of the ventilating unit in order to make the return of the oil to the compressor easier. 2,5 mt is the maximum advised distance between the moto-condensing and the ventilating unit. It corresponds to the length of the machine pipes supplied. Longer distances could significantly undermine the machine performance.
You do not have to install siphons on the refrigerators line as the compressors of the external units are equipped with oil separators.

In the following paragraph you will find further details on how to check the refrigerating system endurance - for BB items.

5.2.1 Tests and checks

Once the pipes connections have been made, you'll have to check che perfect endurance of the refrigerating unit.
To carry out the following operations you will need to use a specific manometric group for R410A and a pump with a minimum flow of 40l l/min:

1. *Unscrew the tap that closes the gas line service fitting.*
2. *Connect both the vacuum pump and the manometric group to the fitting of the gas line by means of flexible pipes with a 5/16" connection.*
3. *Turn on the pump and open the taps of the manometric group.*
4. *Lower the pressure up to -101KPA.*
5. *Keep the depression for at least one hour.*
6. *Close the taps of the manometric group and turn off the pump.*
7. *After 5 minutes - only if the depression is still at -101KPA - go on operating as described in the following point. If the pressure inside the circuit is gone back to a level higher than 101KPA, you'll have to find where the loss is (by means of soap solution with a refrigeration circuit and a nitrogen pressure of about 30 bar). After finding and repairing it you'll have to start over again from point 3.*
8. *Open the gas valve stem with a 4mm socket wrench.*
9. *Put the tap of the gas line service fitting back and fix it with a wrench or a fixed key.*
10. *Put back the taps of both the gas valve stems and the fluid ones and fix them.*

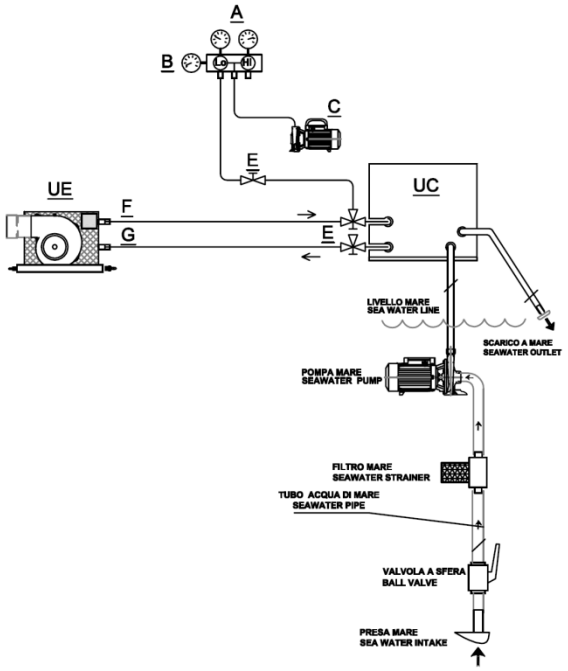

A	*Manometer group*
B	*Possible vacuum gauge*
C	*Tank fluid tap*
D	*R410 gas tank*
E	*Service fitting*
F	*Gas pipe*
G	*Fluid pipe*
UE	*External unit*

CAUTION

If the pipes are longer than 3 mt, you'll have to top up the R410 gas charge by adding 40 gr of it for each meter.

In this case:

- *connect a R410A refrigerant gas cylinder to the manometric group being careful to put it on a precision scale.*
- *Open the taps of the manometric group.*
- *Open the tap of the liquid contained in the cylinder.*
- *Fill up with the necessary amount of refrigerant.*
- *Reclose the taps of the cylinder and of the manometric group too. Disconnect the cylinder.*
- *Write the length of the pipes and the amount of added refrigerant on the product label (it is inside the panel).*

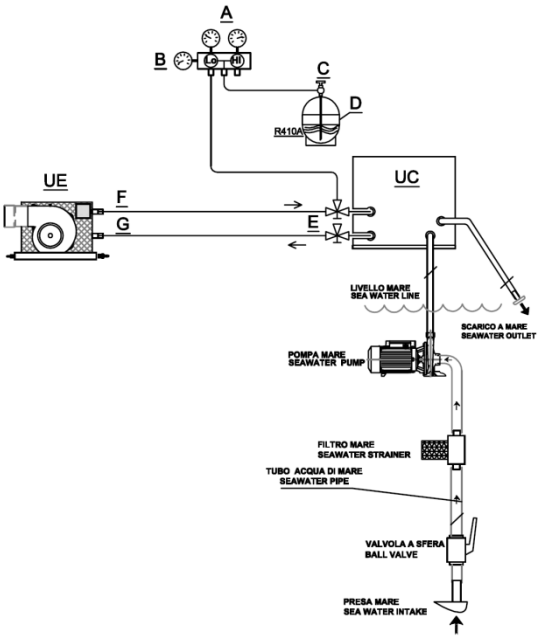

5.3 Connecting the units to the pipes

The connection of the unit to both the seawater circuits pipes and the fan coils takes place by directly inserting the pipes in the dedicated hoses properly indicated.
If the seawater circuit and/or the fan coil circuit are made of rigid material *(steel, PVC, copper)* please install anti-vibration joints before installing the machine *(e.g. installing a 15-20 cm long short log realized with flexible piping could be enough).*
In any case, the pipe-hose connection must be secured by using a couple of inox steel clamps for each connection.
Please notice that all the connections must be made in such a way that they can be easily removed to isolate the machine during the maintenance and repairing operations.
The condensate drain pipe must be connected to the hoses found on the condensate drip pan.

5.3.1 Seawater circuit

The best solution to realize the seawater circuit is to use of a seawater intake reserved only for the air conditioning system.
It is recommended to use a shovel seawater intake containing filtering grooves with a convexity towards such a direction to facilitate the pressure inside the cooling circuit to use the air conditioner also while sailing, whenever the state of the sea allows it.
(*see **Figure 1. assembly***). If the vessel hasn't got a free seawater intake, you should foresee its assembly as near as possible to the keel – especially for sailing boats – so as to prevent or, at least, limit as much as possible the air inlet into the circuit while sailing.

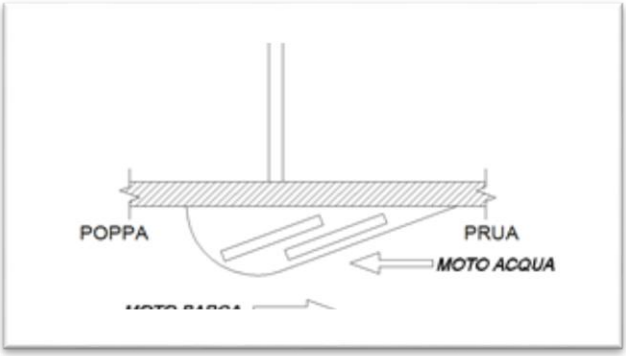

Figure 1. Seawater intake assembly

Alternatively, you can use an exsisting suction line used for onboard services (*e.g. sanitary facilities or generic seawater pump service*) with a T graft and a dedicated gate valve, as long as the seawater line section is big enough to simultaneously power both the seawater circuit of the air conditioner and of the other utilities.
In this case, you should always assemble a non-return clapet valve at the top of the filter so as to make this line independent from those providing other services.

Under no circumstances should you aspire the air conditioner system seawater from the engine or generator set cooling circuit, because the hydraulic head of these powerful pumps is so high that it would not allow the proper seawater flow that the air-conditioning system needs.

If you have to install more Thermowell chiller units, you can use just one seawater intake, as long as it's appropriately sized - *in case of any doubts, please contact Thermowell's Technical Department*.
The seawater circuit must be as short as possible, with no siphons or strocked curves that might impede the priming of the electric pump or increase the pressure drops in the circuit, subsequently leading to a fall in the refrigerator performance.
The piping part placed between the seawater intake valve - *or the T intake placed on the services line* - and the electric pump must be as short as possible. On this spot a full pass shut-off valve must be installed to interrupt the water flow and make maintenance easier.
Before hauling the boat, this valve must always be closed: in this way the pump will still be full of water and it will easily operate for the next launch. After the boat launch and before using the system, check its correct re-opening.

The seawater filter must always be installed under head and at the top of the pump on the suction line.
It's better to install the filter in a way you can easily see, clean and inspect it, indeed, while it's operating, it works also as a control light that allows you to check the water flowing inside the circuit.

After you clean it, you always must:

- ✓ *flush out the air from the top of the filter and check the proper filling of the circuit.*

The filter prevents impurities and dirt to enter the pump and the machine, thus protecting its operating and durability.
The lack of the filter inside the seawater circuit may void the warranty of the pump and the refrigerating unit too.

CAUTION

Whenever you get away from the boat, the seawater circuit must be closed by means of the appropriate tap in order to prevent dangerous situations to occur due to possible accidental damages to the components of the circuit.

The seawater circuit must constantly follow an upward path to the machine, either into the seawater intake-pump stretch and into the pump-unit stretch.
After passing through the exchanger, the circuit can continue its upward path or going downward until the sea draining. This must always be kept above the waterline to allow the circuit flush out any air bubbles on its own.
At the point where there is the water-refrigerant gas exchanger, every regrigerating unit is equipped with two hoses to connect it to the piping that can be made of a spiral tube or another type of proper plastic material - *not provided by the factory*. The seawater inlet and outlet are indicated on labels. The connection between the piping and the other parts of the circuit - *seawater intake, gate valve, filter, air-conditioning unit, sea draining*- must be done by using stainless steel pipe clips - *preferably two for each connection.*

The overboard draining of the waterline water must be placed so as to minimize the noise of the gush and not create disturb to your boat and the other nearby boats.
Once you powered the system, please check the correct water flow through the discharge.
If the discharge had to be placed under the waterline, you would have to install a ball valve and/or a non-return valve on the top of it. In this case, it's better to install a bigger pump than the one requested by the system - *about 15-20%* - in order to overcome the resistance of the seawater on the discharging circuit. Consider, though, that installing the discharge under head makes the circuit cleaning difficult.

The diagram below displays all the examples and errors to avoid during the installation in order to let the pump function correctly as showed in ***Figure 2*** and ***Figure 3.***

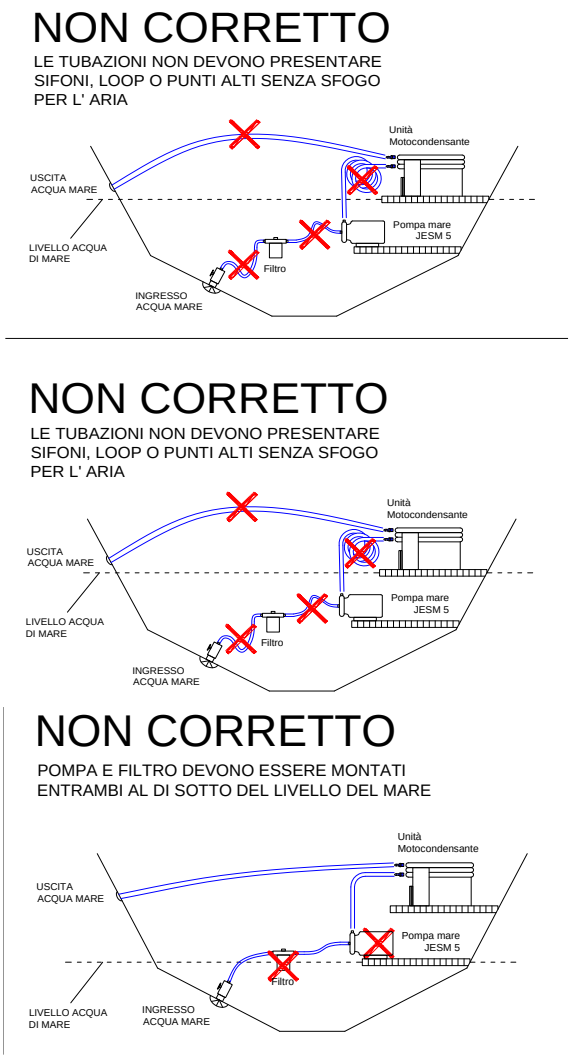

Figure 2. Example of incorrect assembly of the seawater circuit

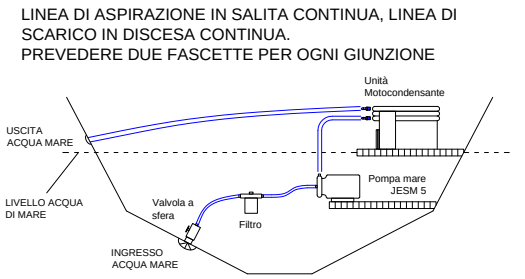

Figure 3. Example of correct assembly of the seawater circuit

The water circulation system is designed as a closed circuit that connects all the air distributors to the chiller.
The dimensions and the types of piping depend on the total capacity in BTU related to the fluid flow rate passing through the circuit.
The following table contains information about the piping size of refrigerated water.

The installation of an undersized pipe will increase the water speed that could cause its erosion.

Moreover, excessive pressure drops may happen and may reduce the water flow rate towards the fan coils or the air treatment units, resulting in performance losses.

Chiller Capacity	Fluid flow rate	Nominal diameter	
BTU/h	*m^3/h*	*Inch*	*mm*
9000	0,5	1/2 "	15
12000	0,6	1/2"	15
24000	1,1	3/4 "	20
36000	1,8	3/4"	20
48000	2,4	1"	25,4
60000	3	1"	25,4
72000	3,6	1 1/4"	32
84000	4,2	1 1/4"	32
96000	4,8	1 1/2"	40
150000	7,5	1 1/2"	40
200000	10,2	2"	50
250000	12,6	2"	50
300000	15	2 1/2"	65
400000	20	3"	80

Table 1 Recommended dimensions for fresh water/fan coil pump circuit

Chiller Capacity	Fluid flow rate	Nominal diameter	
BTU/h	*m^3/h*	*Inch*	*mm*
9000	0,5	1/2 "	15
12000	0,7	1/2"	15
17000	1	3/4 "	20
24000	1,4	3/4 "	20
36000	2,2	1"	25,4
48000	2,4	1"	25,4
60000	3,6	1 1/4"	32
72000	4,3	1 1/4"	32
84000	5	1 1/2"	40
100000	6	1 1/2"	40

Table 2. Recommended dimensions for the seawater/seawater pump circuit

In case of pipings whose diameter doesn't exceed 3", it's better to maintain the fluid speed around 0,5 and 1,5 m/s so as to avoid noise issues.

5.3.2 Air distribution circuit for UB-UBK-IZY-AIRJET air conditioners.

Treated air inlet vents must be placed at the highest point in order to allow a good air flow into the room thus

avoiding it to directly flow back towards the intake grille or towards the thermostat.
If this type of installation is not possibile, you can install the vents in lower position but their jet must point upwards.
The connection between the air conditioner and the salvages must be made by fixing the provided flexible pipe with elastic strips.
You will have to follow the same procedure to connect the pipe to any T outlets in order to let the air flows through adjoining rooms. You can allow the distribution of treated air towards the salvages by using rigid ductings already present in the structure of the boat, as long as they have a proper diameter and are equipped with door heater insulation.
For a correct functioning of the machine, the pipes mustn't be too long and mustn't have any curves; if any, they must have a large radius but mustn't have any narrowings as much as possible.
To install more salvages through T outlets connections, you'd better contact Thermowell's Technical Department.
The suction section of the air conditioner is equipped with a filter.
The unit must be assembled so that you can easily remove the filter for maintenance operations.
In some cases, you may need to canalize the air intake too. In such cases, it's better to contact Thermowell's Technical Department.

5.3.3 Condensate drain circuit

The base where the air conditioners lie on works also as a collection tank for the condensate produced during its operation.
Such tank is equipped with two stainless steel tubes placed on the two short sides of the case which the piping of the condensate drain is connected to.
Please use the provided stainless steel hose clamps to complete the connection. The unit must be placed so that the slope of the condensate drain points downwards - in general, you should place it as low as possible in the area to be air-conditioned. E.g. under a seat or a berth. You'll need to install the units at such a height that it allows the drain piping - mentioned above – to have a proper slope. Please pay attention when you complete the condensate drain circuit because the air conditioner operation may produce significant amounts of condensate that, if not properly drained, could cause damages to the interior surroundings of the boat.
Moreover, the piping of the condensate drain should point vertically for at least 3cm starting from the collection basin – better not having the first tract of the circuit straight because a deposit of condensate water may happen thus flowing back to the basin after oscillator motions of the boat. Then, you can carry on paying attention not to create delocalized counterslopes along the evacuation line. The outboard drain of the condensate must be placed far above the water line. If you can't realize the sea draining you may opt for a bilge draining that must be placed as close as possible to the suction port of the regulatory bilge pump. In some cases, you can realize an additional collection basin emptied by a little outboard pump. Do not place it in the daily bilge of the engine compartment. When you finish installing the circuit, you should check the efficiency of the evacuation system by pouring water into the collection basin.

6. Functional schemes

Symbols used

C	Compressor	
CWR	Condensing exchanger	
EWR	Evaporating exchanger	
FE	Drier filter	
MA	High pressure manometer	
MB	Low pressure manometer	
PA	Growing pressure switch	PA
PB	Dropping pressure switch	PB
PS	Service socket	
VA	High pressure safety valve	
VE	Expansion valve	VE
VL	Solenoid valve - liquid line	
VS	Liquid level indicator	
	4-way valve	

6.1 UC- UCP Chillers

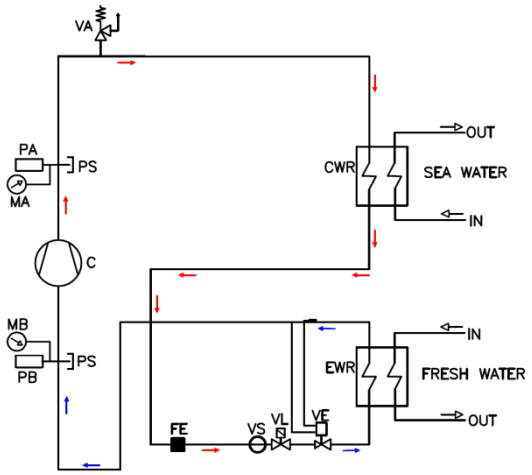

Figure 4. Refrigeration circuit model for UC-UCP units in cooling only version

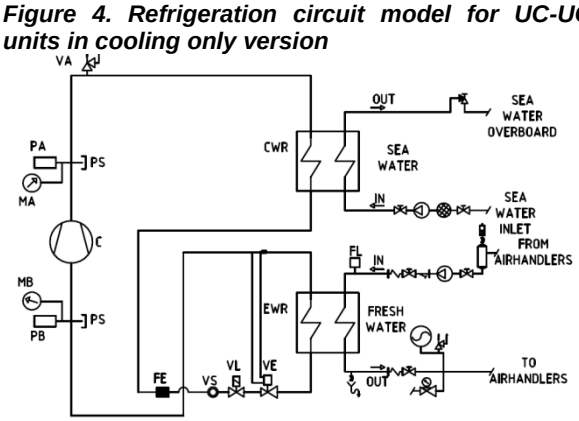

Figure 5. Seawater circuit and fan coil circuit model for UC-UCP units in cooling only version

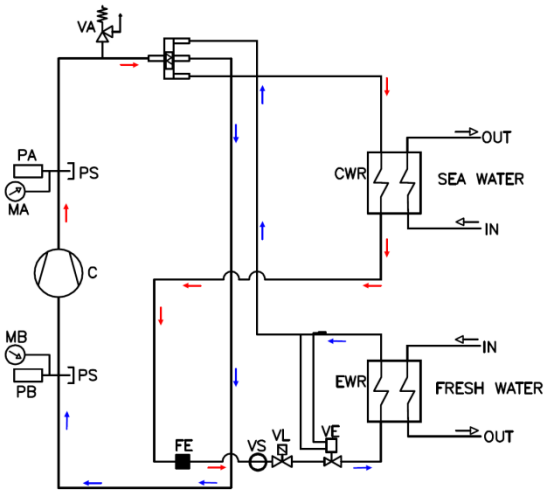

Figure 6. Refrigeration circuit model for UC-UCP model in heat pump (H) version

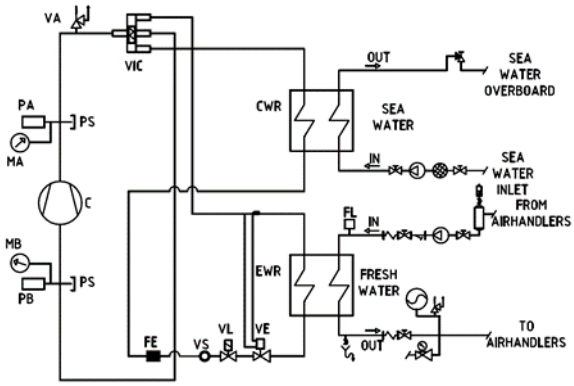

Figure 7. Seawater circuit and fan coil circuit model for UC-UCP unit in heat pump (H) version

6.2 UB-UBK-AIRJET-IZY self-contained units

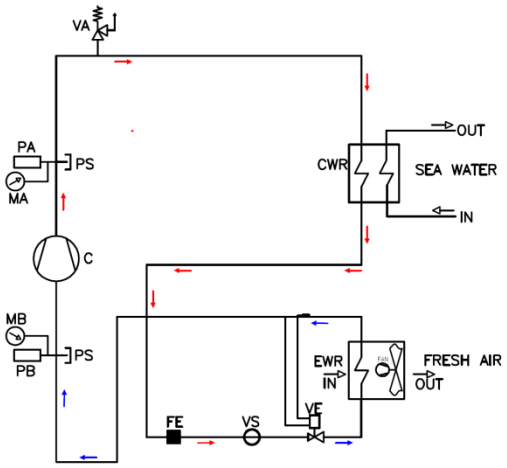

Figure 8. Refrigeration circuit model for UB-UBK-AIRJET-IZY self-contained units in cooling-only version

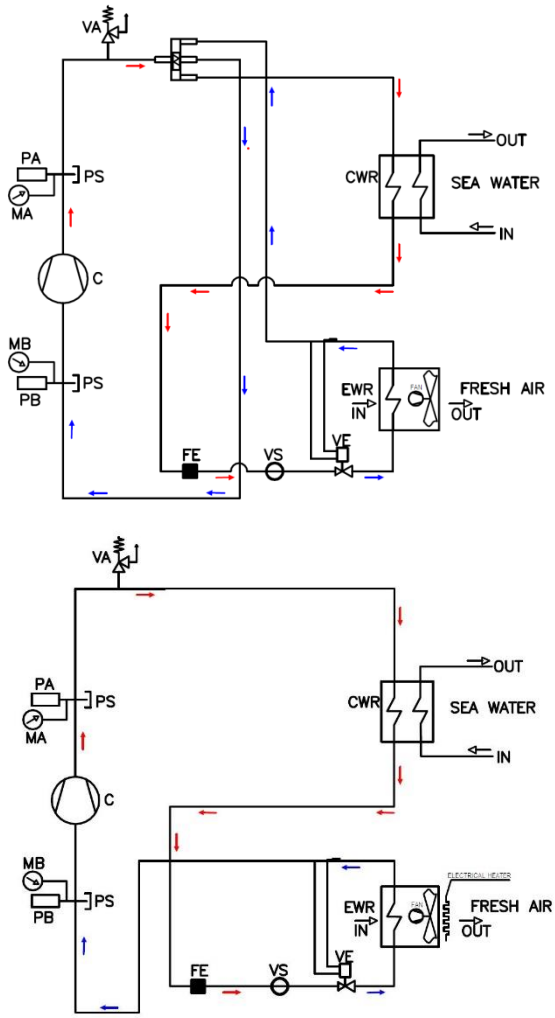

Figure 9. Refrigeration circuit model for UB-UB self-contained units in heat pump (H) version and for IZY with electric resistance

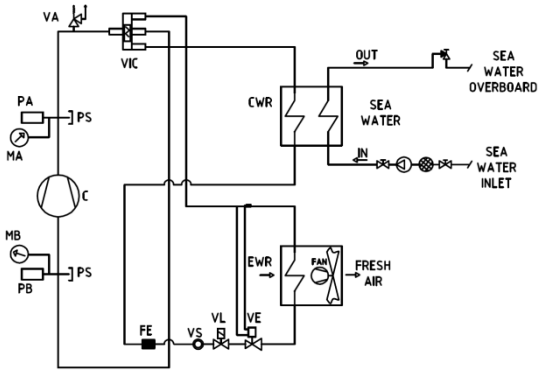

Figure 10. Seawater circuit model for UB-UBK-AIRJET-IZY self-contained units

6.3 BB units

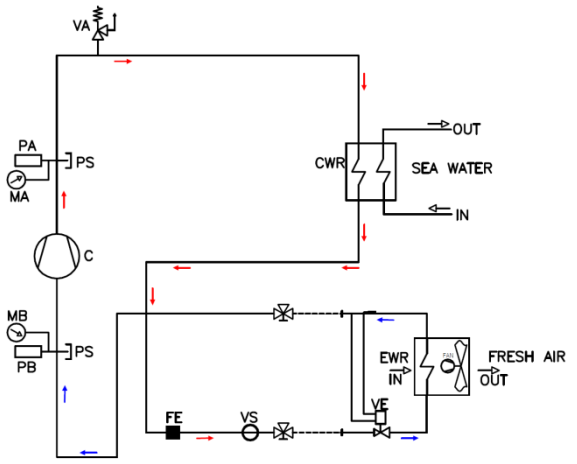

Figure 11. Refrigeration circuit for BB split unit in cooling-only version

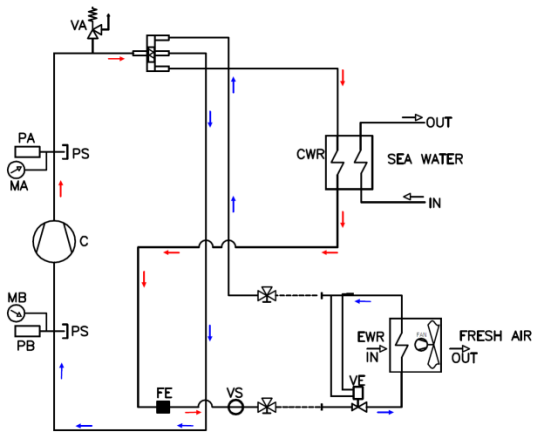

Figure 12. Refrigeration unit for BB split unit in heat pump (H) version

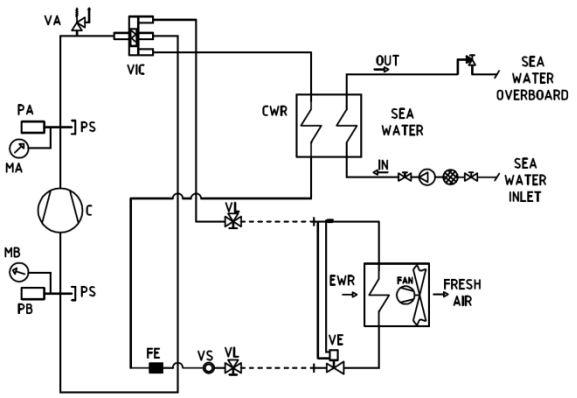

Figure 13. Seawater circuit for BB split unit

7. Safety devices

- **Building pressure switch**

The building pressure switch is installed on the supply line of the appliance and it monitors the condensing pressure - *pressure in correspondence with the compressor's hose*. When the above-mentioned pressure exceeds the range, the growing pressure switch pressure intervenes thus stopping the refrigeration circuit.
After the intervention of the switch, its reactivation happens automatically for the first time as soon as it goes back to the operation range. If it springs a second time, the electronic control stops its functioning definitively. To reactivate the correct functioning, you'll need to switch off and then switch on the unit after you found and solved the causes that led to such an anomaly (*see § **Problems diagnosis***).

- **Dropping pressure switch**

The dropping pressure switch is installed on the aspiration pipe of the appliance and it measures the pressure of the evaporating exchanger - *pressure at the entrance of the compressor*. If the pressure is too low, the pressure switch intervenes and the circuit stops. After its intervention, the reactivation happens automatically for the first time. If it springs a second time, the electronic control stops its functioning definitively. To reactivate the correct functioning, you'll need to switch off and then switch on the unit after you found and solved the causes that led to such an anomaly (*see § **Problems diagnosis***).

- **Protection against the inversion and imbalance of the phases**

The protection against the inversion of the phases is installed in the electrical control panel. Its aim is to prevent the rotation of the compressor in the opposite direction. If the appliance didn't start after such a protection, you might have to swap the connections of two out of the three power supply phases - in three-phase motors only. An improper power supply or phase shift activates an alert that blocks its functioning.

- **Frost protection**

The frost protection working during the appliance operation, prevents the freezing of the water contained in the evaporating exchanger. When the temperature of the water coming out from the evaporating exchanger gets too low, the general regulator disables the appliance. When the value of the water-outlet temperature returns normal, you can reboot the appliance. If in a given period anti-frost protections often happen, anti-frost alarm activates and the appliance stops.
You'll need to manually reset the alarm indicator in the regulator.

- **Additional interlock contact (*on big appliances only, if applicable*)**

Such additional contact was provided to prevent the appliance to work without water flowing in it. If you, for example, connect a flow switch to the appliance, it becomes part of the circuit and allows it to work.

- **Gas release safety valve**

You'll find it on containers or pipes to limit the pressure in order to guarantee the structural integrity of the piece by increasing the safety level of the system. When the pressure builds, the shutter starts lifting and the process fluid starts flowing, so it is forced to leave radially the entire surface of the shutter. When the pressure drops under the pre-set value - blow-down pressure- you'll get

the opposite effect and the valve closes completely in a very short time.

- **Sacrifical anode**

You will find it, if needed, to protect the system from any galvanic currents.

8. Maintenance and support

This part contains useful information for the diagnosis and to correct some problems that could arise in the appliance.

Before starting a diagnostic procedure, you should run a detailed visual check to verify that there are no obvious defects, like hydraulic connections loosenings or defects on electrical wirings.

Please, read carefully this part of the manual before contacting the Customer Service.

If a safety device activates, please stop the appliance and find the reason for its activation before restarting it. The factory-set calibration of the safety device mustn't under any circumstances be altered. If you can't find the cause of the problem, contact the Customer Service.

9. Problems diagnosis

Warning 1: A circuit does not start

LIKELY CAUSE	CORRECTIVE OR CONTROL ACTION
One of the following safety devices activated: ✓ *Dropping pressure switch* ✓ *Building pressure switch* ✓ *Protection against phases inversion* ✓ *Anti-frost*	*See warning 2: "One of the following safety devices activated"*
The timing to prevent close reboots has not passed yet.	*The circtuit can reboot only after about 3 minutes.*

Warning 2: One of the following safety devices activated

Dropping pressure switch	
LIKELY CAUSE	**CORRECTIVE OR CONTROL ACTION**
Load loss of the refrigerant charge.	*Check for any losses, find and eliminate them. Restore the proper level of the charge.*
Building pressure switch	
LIKELY CAUSE	**CORRECTIVE OR CONTROL ACTION**
The water flow going through the condensing exchanger is too low.	*Rise the water flow rate and/or make sure that the filter is not clogged.*
Protection against phases inversion activated	
LIKELY CAUSE	**CORRECTIVE OR CONTROL ACTION**
The connection of two out of the three phases of the power supply line was changed (for three-phases appliances only).	*Restore the phases in their right sequence (an authorized technician must perform this operation).*
Voltage lowering under 20%.	*Wait for the voltage to return within the operating range.*
A phase is improperly connected.	*Check the connection of all the phases.*
Intervention of the flow switch	
LIKELY CAUSE	**CORRECTIVE OR CONTROL ACTION**
No water flow rate found.	*Check the water pump.*
The contactor burnt out.	*Contact an authorized technician to replace it.*
The starting condenser went out (for 220V machines only).	*Contact an authorized technician to replace it.*
Potential interruptions of electrical wirings.	*Contact an authorized technician to restore the right connection.*
Intervention of the anti-frost protection	
LIKELY CAUSE	**CORRECTIVE OR CONTROL ACTION**
Limited water flow rate.	*Rise water flow rate.*
The temperature of the water entering the evaporating exchanger is low.	*Rise the temperature of entering water.*
Defective probe or tool.	*Check that the probe or the measuring tool are not defective.*
The contactor of the compressor is ruined and the circuit stays always closed.	*Check the proper state of the contactor.*

- **Warning 3: The appliance stops shortly after its starting.**

LIKELY CAUSE	CORRECTIVE OR CONTROL ACTION
One of the safety devices activated.	*Check the safety devices.*
The voltage is too low.	*Measure the voltage of the power supply panel and – if needed – of the electrical panel of the appliance too.*

WARNINGS
CAUTION: BEFORE RESETTING AN ALARM, PLEASE FIND OUT WHAT TRIGGERED IT.

The alarms show a potentially dangerous situation for the integrity of the machine.
Before resetting the alarm, please find out and then remove the cause of the block: a repeated reset can lead to irreversible damages. That's why the reactivation is manual, that is to say that you need a keyboard to do it – unless the problem disappeared.

Fort further information, please consult the attached manuals "UCPxx.2" or "UCxx-UCPxx", "COMEDE1".

10. Electrical installation

10.1 Cables

The mains power supply must be equipped with a fuse or a switch with its related calibration. Please, use PVC-insulated tripolar, quadripolar or multipolar cables with copper conductors put together according the established conditions. The cables dimensions must be 100% selected by the currents showed on the users' plate. The following table is a mere reference for a proper sizing of the cables.

FULL LOAD CURRENT	CABLE SIZE
[A]	**[mm²]**
3	1,5
5	1,5
10	2,5
15	4
20	6
30	10
40	10
55	16
70	25
115	35
130	35
150	50
175	50
200	50
230	70

The loads showed in the table above were defined basing on the conventional room temperature of 30°C - consider that the temperature can occasionally reach 35°C. If the room temperature is lower than the conventional one, the load increases; on the contrary, if the temperature increases, the load decreases. The following temperature shows the correction factors of room temperature.

Air temperature in °C	*Load factors*
10	1,29
15	1,22
20	1,15
25	1,07
30	1
35	0,93
40	0,82
45	0,61
50	0,56

10.2 Grounding

The connections of the cables on the ground must have at least the 50% of the nominal current of the power supply cables.

To connect the grounding system to the machine, please use cables whose length is as shorter as possible. The system must be securely fixed where it can't be easily unplugged. Please, check periodically the grounding system and use shielded cables *(protected by proper sheath)* to connect it to the engine. Inlet and outlet ground connections are interconnected in the panel so as to make the following connections: engine frame grounding – system grounding and engine frame grounding – machine grounding.

10.3 Ground terminals

The size of ground terminals must fit the size of ground cables.
Please refer to the electrical diagrams provided with the machine.

11. Regulatory references

Here below, the main regulatory references:

UNI EN 14511-1:2018 *Air conditioners, liquid chilling packages and heat pumps for space heating and cooling and process chillers, with electrically driven compressors - Part 1: Terms and definitions*

UNI EN 14511-2:2018 *Air conditioners, liquid chilling packages and heat pumps for space heating and cooling and process chillers, with electrically driven compressors - Part 2: Test conditions*

UNI EN 14511-3:2018 *Air conditioners, liquid chilling packages and heat pumps for space heating and cooling and process chillers, with electrically driven compressors - Part 3: Test methods*

UNI EN 14511-4:2018 *Air conditioners, liquid chilling packages and heat pumps for space heating and cooling and process chillers, with electrically driven compressors - Part 3: Requirements*

UNI EN 378-1:2017 *Refrigerating systems and heat pumps - Safety and environmental requirements - Part 1: Basic requirements, definitions, classification and selection criteria*

UNI EN 378-2:2017 *Refrigeration systems and heat pumps - Safety and environmental requirements - Part 2: Design, construction, testing, marking and documentation*

UNI EN 378-3:2017 *Refrigeration systems and heat pumps - Safety and environmental requirements - Part 3: Installation site and personal protection*

UNI EN 378-4:2017 *Refrigeration systems and heat pumps - Safety and environmental requirements - Part 4: Operation, maintenance, repair and recovery.*

UNI EN 1736:2009 *Refrigerating systems and heat vpumps – Flexible pipe elements, vibration isolators, expansion joints and non-metallic tubes – Requirements, design and installation*

UNI EN 1861:2000 *Refrigerating systems and heat pumps - System flow diagrams and piping and instrument diagrams - Layout and symbols*

UNI EN 12178:2017 *Refrigerating systems and heat pumps – Liquid level indicators - Requirements, testing and marking*

UNI EN 12263:2000 *Refrigerating systems and heat pumps - Safety switching devices for limiting the pressure - Requirements and tests*

UNI EN 12284:2004 *Refrigerating systems and heat pumps – Valves - Requirements, testing and marking*

UNI EN 12828:2014 *Heating systems for buildings – design for water-based heating systems*

UNI EN 12831-1:2018 Energy performance of buildings - method for calculation of the design heat load - Part 1: space heating load, Module M3-3

UNI EN 13136:2019 *Refrigerating systems and heat pumps - Pressure relief devices and their associated piping - Methods for calculation.*

12. Addresses

Company Name	**Thermowell® di Renato Napoli**
Registered Office	73010 Surbo (LE) *Via Ugo Foscolo, 8*
Rea number	LE - 206046
Vat	03170220754
F.C.	NPLRNT60C16B180L
Telephone	0832-300214
Website	*www.thermowellmarine.com*
Mail Address	*info@thermowellmarine.com*
Pec Address	*thermowell@pec.it*
	@ThermowellMarine
	@ThermowellMarine
	@Thermowell I Marine air conditioning

thermowell

Deposited and registered trademark at
ITALIAN PATENT AND TRADEMARK OFFICE

- **Notes**